Li-ion Polymer Battery Specification

聚合物锂离子电池规格书

MODEL
型 号: 3.7V/702030+PCM

Capacity
容 量: 350mAh

Customer
客 户: R03

深圳市诺威恩科技有限公司 文控中心2014 发行章

Registered 编制	Checked 审核	Approved 批准
潘承	温 恒 (Roc)	

Customer Approve 客户确认		
Dept. 部门	Signature 签名	Date 日期
QA Dept 品质		
R&D Dept 研发		
Approved 批准		

Shenzhen Novel Battery Technology Co., Ltd.
Add.: Room 409, Building C, Hangkong Road, Sanwei , Xixiang, Bao'an District, Shenzhen 518126, China
地址：深圳市宝安区西乡街道三围航空路 30 号 C 栋 409（同安物流） 邮编：518126
Tel（电话）: +86-755-8259 8778 / 8147 1881
Fax（传真）:+86-755-2944 1622

Content

目录

1 .Scope 适用范围

This specification describes the basic performance, technical requirement, testing method, warning and caution of the li-ion Polymer rechargeable battery .The specification only applies to Shenzhen Novel Battery Technology Co., Ltd.

本标准规定了聚合物锂离子可充电池的基本性能、技术要求、测试方法及注意事项，本标准只适用于深圳诺威恩科技有限公司所生产的聚合物锂离子电池。

2. Dimension 成品尺寸：

3.7V NV-702030 350mAh 1.3Wh with PCM and lead wires

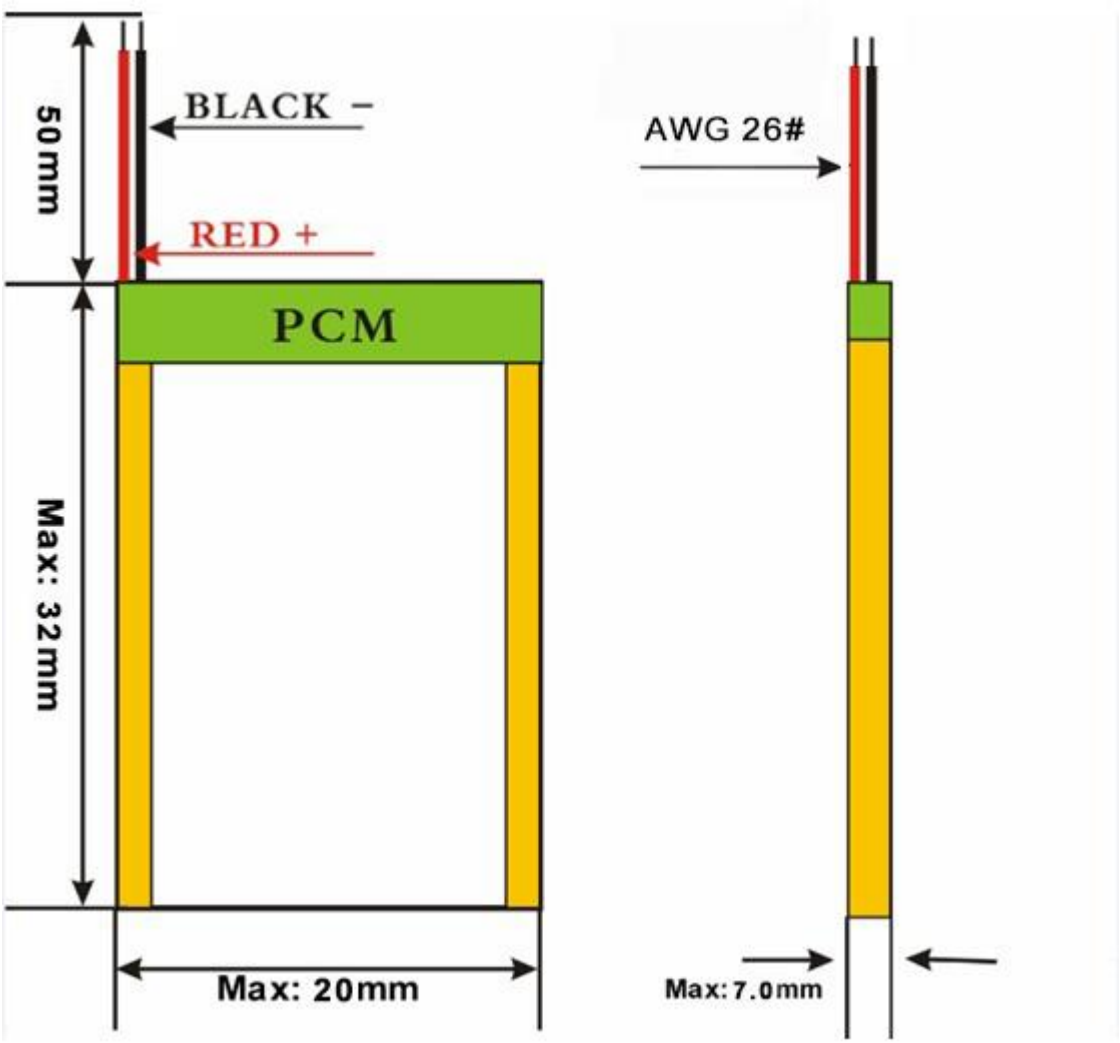

T(厚 度): Max 6.5mm ± 0.5mm	W(宽度): Max 20mm	H (高度): Max 30mm±2mm
Wire model 线型 Connector 插头	UL1007 AWG26# 左出线 红黑线外露线长 L:50±3mm (Exposed wire length)	

3.Specification 产品规格

NO.	Item 项目	Specifications 规格要求
3.1	Typical capacity 典型容量	350mAh 0.2C Discharge (0.2C 放电)
3.2	Minimum capacity 最小容量	320mAh 0.2C Discharge （0.2C 放电）
3.3	Nominal voltage 标称电压	3.7V
3.4	Charge current 充电电流	Standard Charge (标准充电) ：0.2C Rapid charge (快速充电) 0.50C
3.5	Standard Charging method 标准充电方法	0.2C CC（constant current）charge to 4.2V/cell,then CV(constant voltage 4.2V/cell)charge till charge current decline to ≤0.01C 0.2C CC（恒流）充电至 4.2V/cell，再 CV（恒压 4.2V/cell）充电直至充电电流≤0.01C
3.6	Charging time 充电时间	Standard Charging (标准充电) Approx 6 hours 大约 6 小时 Rapid charge (快速充电) Approx 2.5 hours 大约 2.5 小时
3.7	Max. charge current 最大充电电流	Constant Current 1C Constant Voltage 4.2V/cell 0.01 C cut-off（持续电流：1C 持续电压：4.2V/cell 截止电流：0.01 C）
3.8	Max. discharge current 最大放电电流	Constant current 1C end voltage3.0V（持续电流：1C 截止电压：3.0V/cell）
3.9	Standard Discharge Current 标准放电电流	Constant current 0.2 C end voltage3.0V/cell（持续电流：0.2C 截止电压：3.0V/cell）
3.10	Discharge cut-off voltage 放电截止电压	2.95~3.05V/cell
3.11	Charge cut-off Voltage 充电截止电压	4.20~4.30V/cell
3.12	Initial Impedance 初始内阻	≤80mΩ
3.13	Weight 重量	Approx(约)：7.5g
3.14	Operating temperature 工作温度	Charging(充电)： 0℃~45℃ Discharging(放电)：-20℃~50℃
3.15	Storage temperature 储存温度	-20℃~45℃ ≤1 month -20℃~40℃ ≤3 month -20℃~20℃ ≤1 year Percentage of recoverable capacity no less than 80% of the initial capacities 恢复容量不低于初始容量的 80%
3.16	Recoverable capacity 恢复容量	Constant current 0.5C charge to 4.2V, then constant voltage charge to current declines to 0.01C, rest for 10min，constant current 0.5C discharge to 3.0V，rest for 10min.Repeat above steps 3 times, recording the maximum capacity 先用 0.5 C 恒流充电至 4.2V，再恒压 4.2V 充电直至充电电流≤0.01C,搁置 10 分钟,再用 0.5C 电流放电至 3.0V;又搁置 10 分钟,重复以上步骤 3 次,记录容量最大值
3.17	Storage Humidity 储存湿度	≤75% RH
3.18	Appearance 外观	Without scratch, distortion, contamination and leakage (无划痕、变形、污迹、电解液泄露)
3.19	Standard environmental condition 标准环境	Temperature(温度) ： 23±5℃ Humidity（湿度） ： 45-75%RH

		Atmospheric Pressure（大气压） ： 86-106 Kpa

4 General Performance 常规性能

No.	Item 项目	Test Methods and Condition 测试方法和条件	Criteria 标准
4.1	0.2C Capacity 0.2C 容量	After standard charging, rest battery for 10min, then discharging at 0.2C to voltage 3.0V, recording the discharging time. 标准充饱电后,搁置 10 分钟,然后用 0.2C 电流放电至 3.0V,所记录放电时间	≥300min
4.2	1C Capacity 1C 容量	After standard charging, rest battery for 10min, then discharging at 1C to voltage 3.0V, recording the discharging Capacity 标准充饱电后,搁置 10 分钟,然后用 1C 电流放电至 3.0V,记录容量	≥51min
4.3	Cycle Life 循环寿命	Constant current 0.5C charge to 4.2V, then constant voltage charge to current declines to 0.01C, rest 10min，constant current 0.5C discharge to 3.0V，rest 10min. Repeat above steps till continuously discharging capacity Higher than 80% of the Initial Capacities of the Cells 先用 0.5 C 恒流充电至 4.2V，再恒压 4.2V 充电直至充电电流≤0.01C,搁置 10 分钟,再用 0.5C 电流放电至 3.0V;又搁置 10 分钟,重复以上步骤,直到放电容量是初始容量的 80%	≥500 times(次)
4.4	Capability of keeping electricity 荷电保持能力	20±5℃, After standard charging, rest the battery 28days, discharging at 0.2C to voltage 3.0V, recording the discharging time. 在 20±5℃状态下,标准充饱电后,电芯搁置 28 天,然后用 0.2C 放电至 3.0V,所记录放电时间.	≥240min

5 Environment Performance 环境性能

No.	Item 项目	Test Methods and Condition 测试方法和条件	Criteria 标准
5.1	Discharge at high temperature 高温放电	After standard charging, rest the Cells 4h at 60±2℃, then discharging at 1C to voltage 3.0V, recording the discharging time. 标准充电后，在 60±2℃条件下贮存 4h，然后用 1C 放电至 3.0V,所记录放电时间.	≥51min
5.2	Discharge at low temperature 低温放电	After standard charging, laying the Cells 16h at -20±2℃, then discharging at 0.2C to voltage 3.0V, recording the discharging time. 标准充电后，在-20±2℃条件下贮存 16h，然后用 0.2C 放电至 3.0V,所记录放电时间.	≥210min
5.3	Thermal shock 热冲击	Put the battery in the oven. The temperature of the oven is to be raised at 5±2℃ per minute to a temperature of 130±2℃ and remains 30 minutes. 将电池放进烘箱内，以 5±2℃/min 速度升高烘箱内温度至 130±2℃后,恒温 30min.	No fire, no smoke 不起火,不冒烟

6 Safe Characteristic 安全性能

No.	Item 项目	Test Methods and Condition 测试方法和条件	Criteria 标准
6.1	Overcharge testing 过充测试	At 23±5℃, charging cells with constant current 3C to voltage 4.6V, then with constant voltage 4.6V till current decline to 0. Stop test till cells temperature 10℃ lower than max temperature. 在 23±5℃状态下,电池用 3C 电流充电至 4.6V,然后恒压 4.6V 让电流下降接近为 0A,监视电池温度变化,当电池温度下降一峰值低于 10℃时,停止实验.	No smoke or fire 不起火,不冒烟
6.2	Over discharge testing/ 过放测试	At 23±5℃, According to the requirements of standard charge, the cells will be discharge to cut-off voltage, then connect with external load of 30 ohm for 24 hours. 在 23±5℃状态下, 按标准放电的要求放电至终止电压后,外接 30Ω 负载放电 24 小时.	No fire, no smoke, no leakage. 无起火,无冒烟,无泄液
6.3	Short-circuit testing 短路测试	At 23±5℃, After standard charging, connect cells anode and cathode by wire which impedance less than 50mΩ, keep 6h. 在 23±5℃状态下,标准充电后,将电池的正负极用一根小于 50mΩ 的导线连接,放置 6 小时.	No smoke or fire 不起火,不冒烟

※Above testing of safe characteristic must be with protective equipment.(安全性能测试应在有保护措施下进行)

保护板电性能检测参数及原理图

☆ **电性能检测参数**

Item 项目	Symbol 符号	Content 详细内容	Min 最小	Norm 标准	Max 最大	Unit 单位
Over charge Protection 过充保护	V_{CU}	Over charge detection voltage 过充检测电压	4.255	4.28	4.305	V
		Over discharge recovery voltage 过放恢复电压	4.03	4.08	4.13	V
	t_{CU}	Over charge release voltage 过充解除电压	50	100	150	MS
Over discharge protection 过放保护	V_{DL}	Over discharge detection voltage 过放检测电压	2.85	2.90	2.95	V
		Over discharge recovery voltage 过放恢复电压	2.95	3.0	3.05	V
	t_{DL}	Over discharge detection delay time 过放保护延迟时间	10	25	40	MS
Over current Protection 过流保护	V_{IOV1}	Over current detection voltage 过流保护检测电压	0.125	0.15	0.175	V
	t_{IOV1}	Over current detection delay time 过流保护延迟时间	5	10	15	MS
		Over current detection current 放电电流	6	8	9.0	A
		Release condition 保护解除条件	Cut load 断开负载			

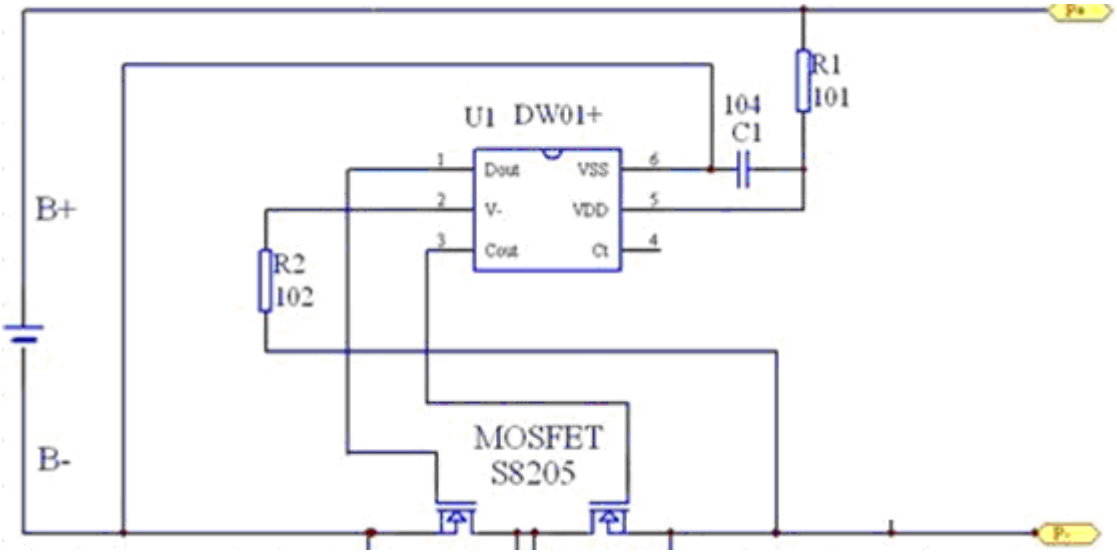

PCB 板 物 料 清 单

序号	物料代码	物料名称	规 格 型 号	单位	数量	备注	厂商
1	U1	控 制 IC	2111GB SOT-23-6	个	1		宏康
2	U2	MOS 管	F8205 TSSOP-8	个	2		德普微
3	R1	贴片电阻	101 5% 1/16W 0603	个	1		旺诠
4	R2	贴片电阻	102 5% 1/16W 0603	个	1		旺诠
5	C1	贴片电容	104 5% 50V 0603	个	1		旺诠
6	R3	热敏电阻	103 1% 1/16W 0603	个	1		
7	PCB	线 路 板	34*3.5*0.6	个	1		

7.Warnings 警告

To prevent the possibility of the battery from leaking, heating, fire .please observe the following precautions:

为防止电池可能发生的泄漏,发热,起火,请注意以下预防措施:

The soft aluminum packing foil is very easily damaged by sharp edge parts such as Ni-tabs, pins and needles .Do not strike at battery with any sharp edge parts.

☆ 电池外包装膜易被镍片,尖针等尖锐部件损伤,禁止用尖锐部件碰伤电池.

Do not immerse the battery in water and seawater

☆ 严禁将电池浸入海水或水中.

Do not use and leave the battery near a heat source as fire or heater

☆ 禁止将电池在热高温源旁,如火,加热器等使用设备.

When recharging, use the battery charger specifically for that purpose

☆ 充电时请选用锂离子电池专用充电器.

Do not reverse the position and negative terminals

☆ 禁止颠倒正负极使用电池

Do not connect the battery to an electrical outlet

☆ 禁止将电池直接接入电源插座

Do not discard the battle in fire or heat it

☆ 禁止将电池丢入火或加热器中

The battery tabs are not so stubborn especially for aluminum tab. Do not bend tab.

☆ 电池极耳的机械强度不坚固,特别是铝极耳,禁止弯折.

Do not short-circuit the battery by directly connecting the positive and negative terminal with metal object such wire

☆ 禁止用金属直接将电池的正负极进行短路连接.

Do not transport and store the battery together with metal objects such as necklaces, hairpins etc.

☆ 禁止将电池与金属,如发夹,项链等一起运输或贮存.

Do not strike or throw the battery.

☆ 禁止敲击或抛掷,踩踏电池等.

Do not directly solder the battery and pierce the battery with a nail or other sharp object.

☆ 禁止直接焊接电池和用钉子或其它利器刺穿电池.

8. Cautions 注意

Do not use or leave the battery at very high temperature (for example, at strong direct sunlight or a vehicle in extremely hot conditions).Otherwise, it can overheat or fire or its performance will be degenerate and its service life will be decreased.

△ 禁止在高温下(直热的阳光下或很热的汽车中)使用或放置电池,否则可能会引起电池过热,起火或功能失效,从而导致电池寿命减短.

Do not use it in a location where static electricity is great, otherwise, the safety devices may be damaged, which will cause hidden trouble of safety.

△ 禁止在强静电和强磁场的地方使用,否则易破坏电池安全保护装置,带来不安全隐患.

If the battery leaks and the electrolyte get into the eyes, do not rub eyes, instead, rinse the eyes, with clean running water, and immediately seek medical attention. Otherwise, eye injury can result.

△ 如果电池发生泄漏,电解液进入眼睛,请不要揉擦,应用清水冲洗眼睛,并立即送医院治疗,否则会伤害

眼睛.

If the battery gives off an odor, generates heat, becomes discolored or deformed, or in any way appear abnormal during use, recharging or storage, immediately remove it from the device or battery charge and stop using it.

△ 如果电池在使用或贮存中发出异味,发热,变色,变形,或者是在充电过程中出现任何异常现象,立即将电池从充电器或装置中移开,并停止使用.

In case the battery terminals are dirt, clean the terminals with a dry cloth before use. Otherwise power failure or charge failure may occur due to the poor connection with the instrument.

△ 如果电池弄脏,使用前应用干布抹净,否则可能会因接触不良而影响性能失效.

Be aware discharged battery may cause fire or smoke, tape the terminals to insulate them.

△ 废弃之电池应用绝缘纸包住电极,以防起火, 冒烟.

The batteries should be stored at room temperature, charged to about 30% to 50% of capacity. In case of over-discharge, batteries should be charged for one time every 3 months while storing and batteries should be discharge and charge after being stored more than a year in order to activate it and restore energy.

△电池应当在室温下存放，应充到 30%至 50%的电量。为防止电池过放，建议每 3 个月进行一次充电，如储存时间超过一年，建议每半年进行一次充、放电以激活电池。