Power

Power Supply

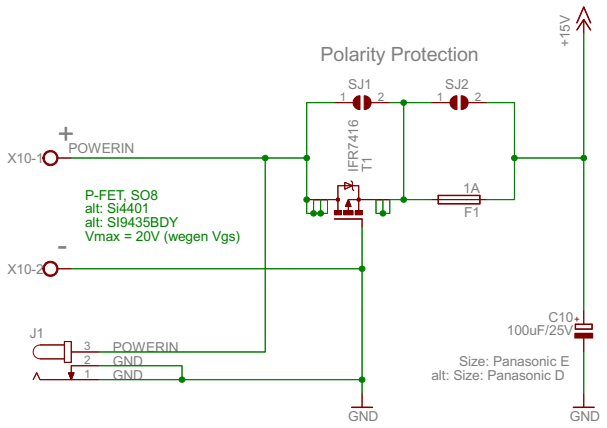

Switch Regulator Module

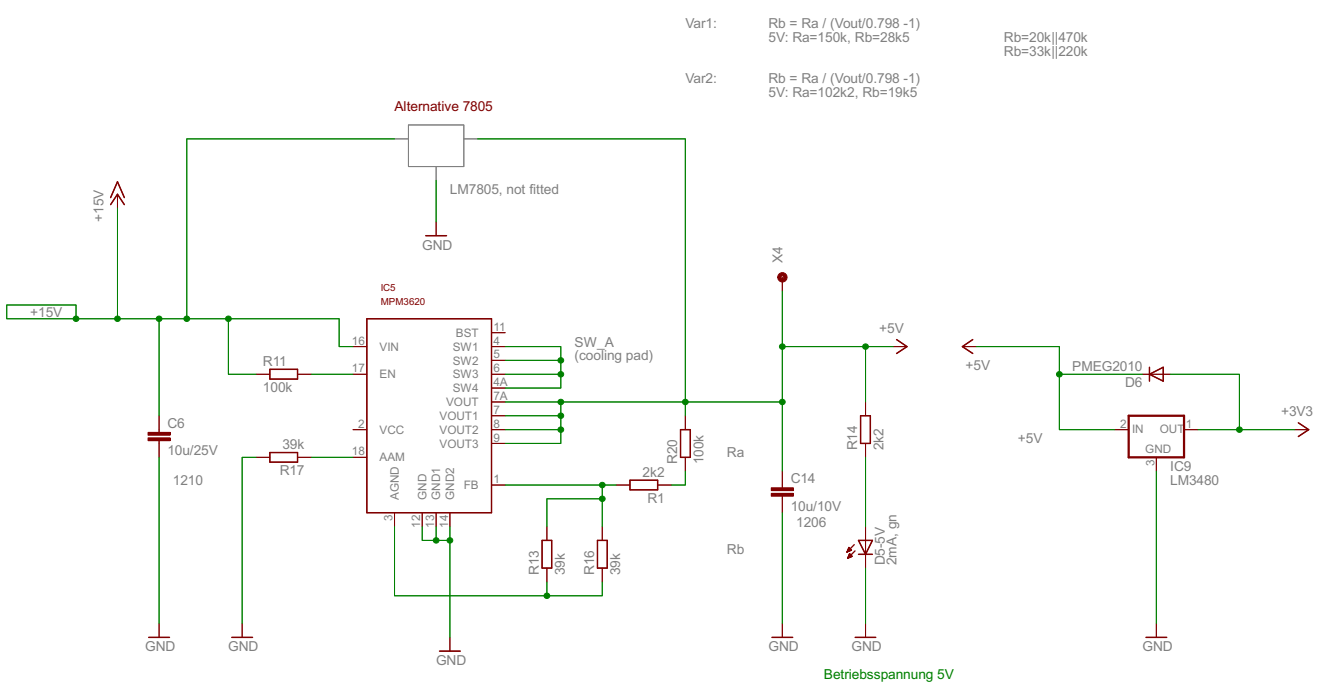

History

2016-01-14: V1.0 kw copied from OneST and BiDiBOne
2016-03-04: V1.1 kw changed package IC13 from MSOP to SOIC
2016-03-04: V1.1 kw changed R17 from 47k to 39k; changed R31-34 to 10k
2016-03-04: V1.1 kw changed R13, R16 to 39k, changed R20 to 100k, added R1 1k.

BiDiB

BiDiB

H1 MOUNT-PAD-ROUND3.2 H2 MOUNT-PAD-ROUND3.2 H3 MOUNT-PAD-ROUND3.2 H4 MOUNT-PAD-ROUND3.2

Entwicklung: Wolfgang Kufer www.opendcc.de Christoph Schörner www.fichtelbahn.de	Project: ST4 BiDiB, 4 Servos + Frogpolarity	ST4_V1.1
		23.03.2016 09:43:31
		Sheet: 1/5

Servo-Outputs

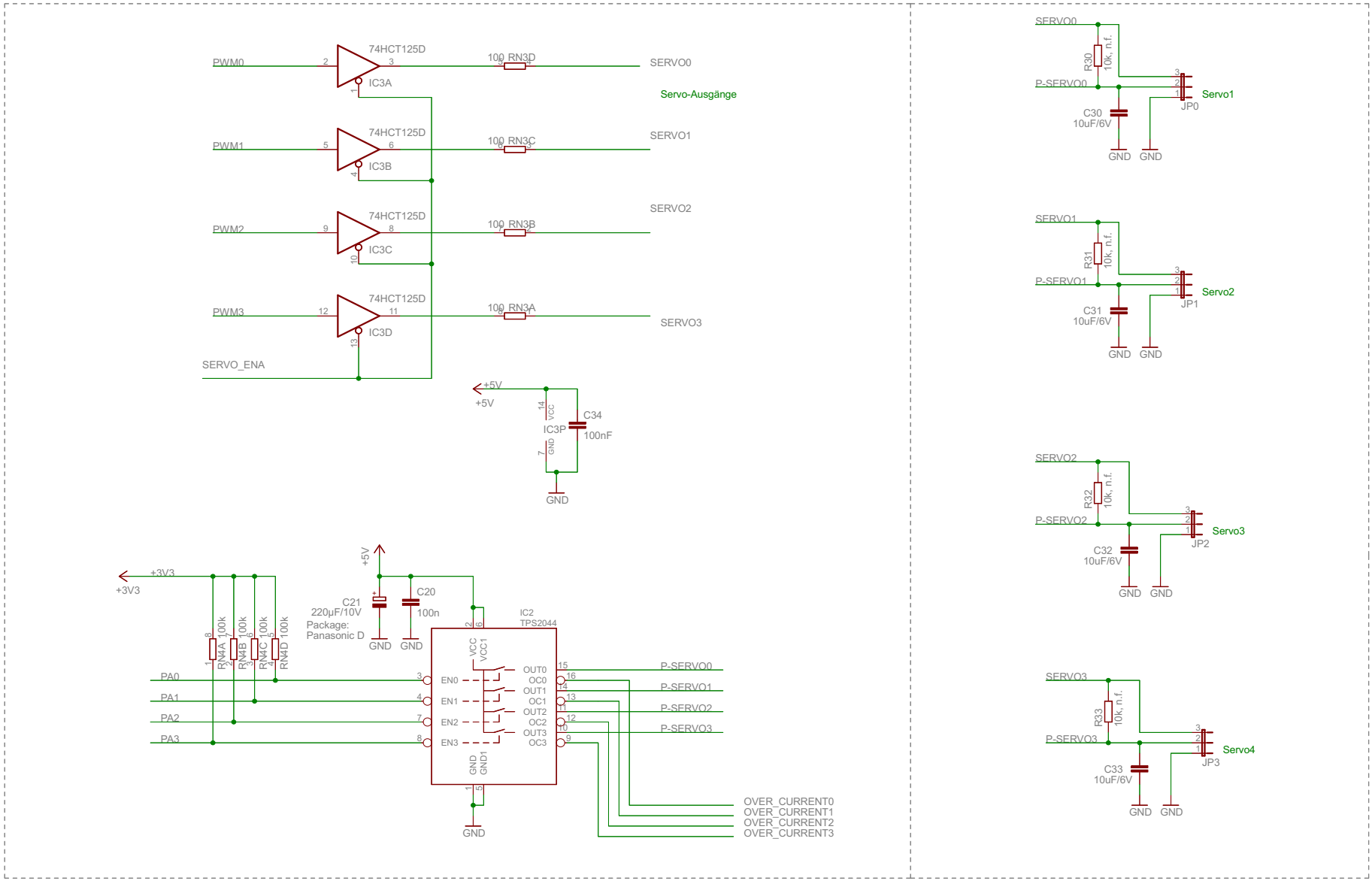

Entwicklung: Wolfgang Kufer www.opendcc.de Christoph Schörner www.fichtelbahn.de	Project: ST4 BiDiB, 4 Servos + Frogpolarity	ST4_V1.1 23.03.2016 09:43:31 Sheet: 2/5

Frog Polarity / Herzstückpolarisation

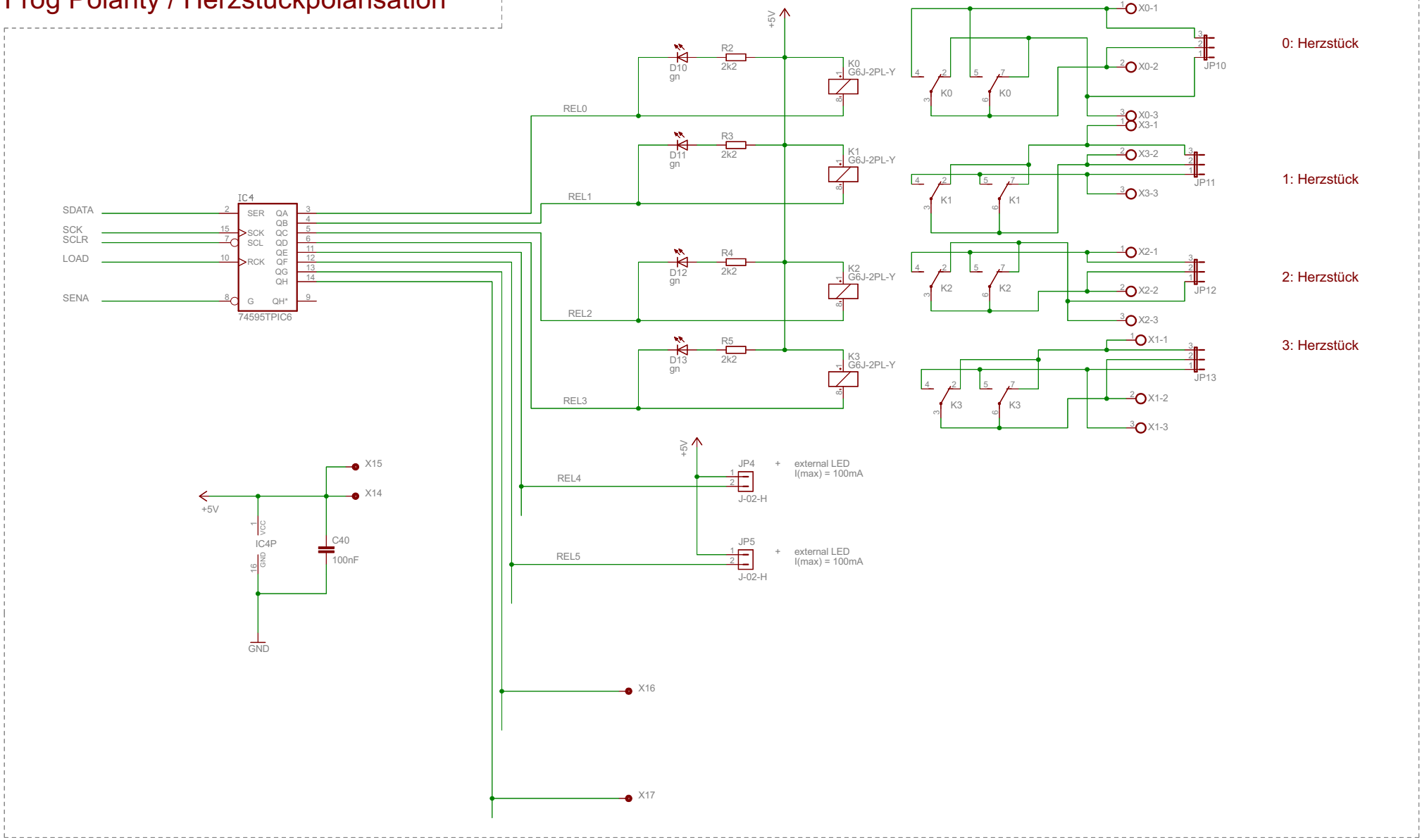

Entwicklung: Wolfgang Kufer www.opendcc.de Christoph Schörner www.fichtelbahn.de	Project: ST4 BiDiB, 4 Servos + Frogpolarity	ST4_V1.1 23.03.2016 09:43:31 Sheet: 3/5

Interface

BiDiB-Interface

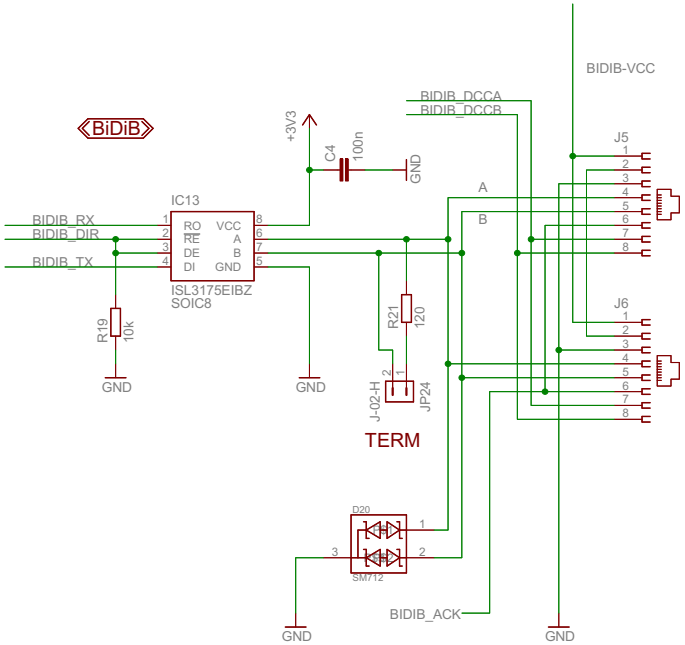

Input / Positionfeedback

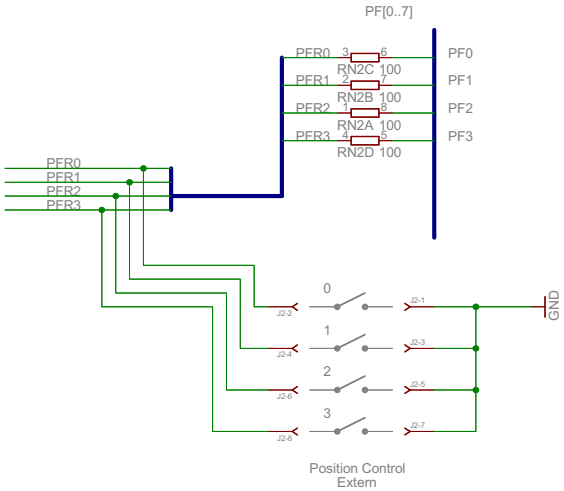

GBM16T

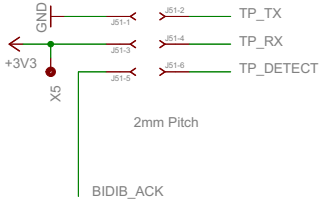

Entwicklung: Wolfgang Kufer www.opendcc.de Christoph Schörner www.fichtelbahn.de	Project: ST4 BiDiB, 4 Servos + Frogpolarity	ST4_V1.1 23.03.2016 09:43:31 Sheet: 4/5

Processor

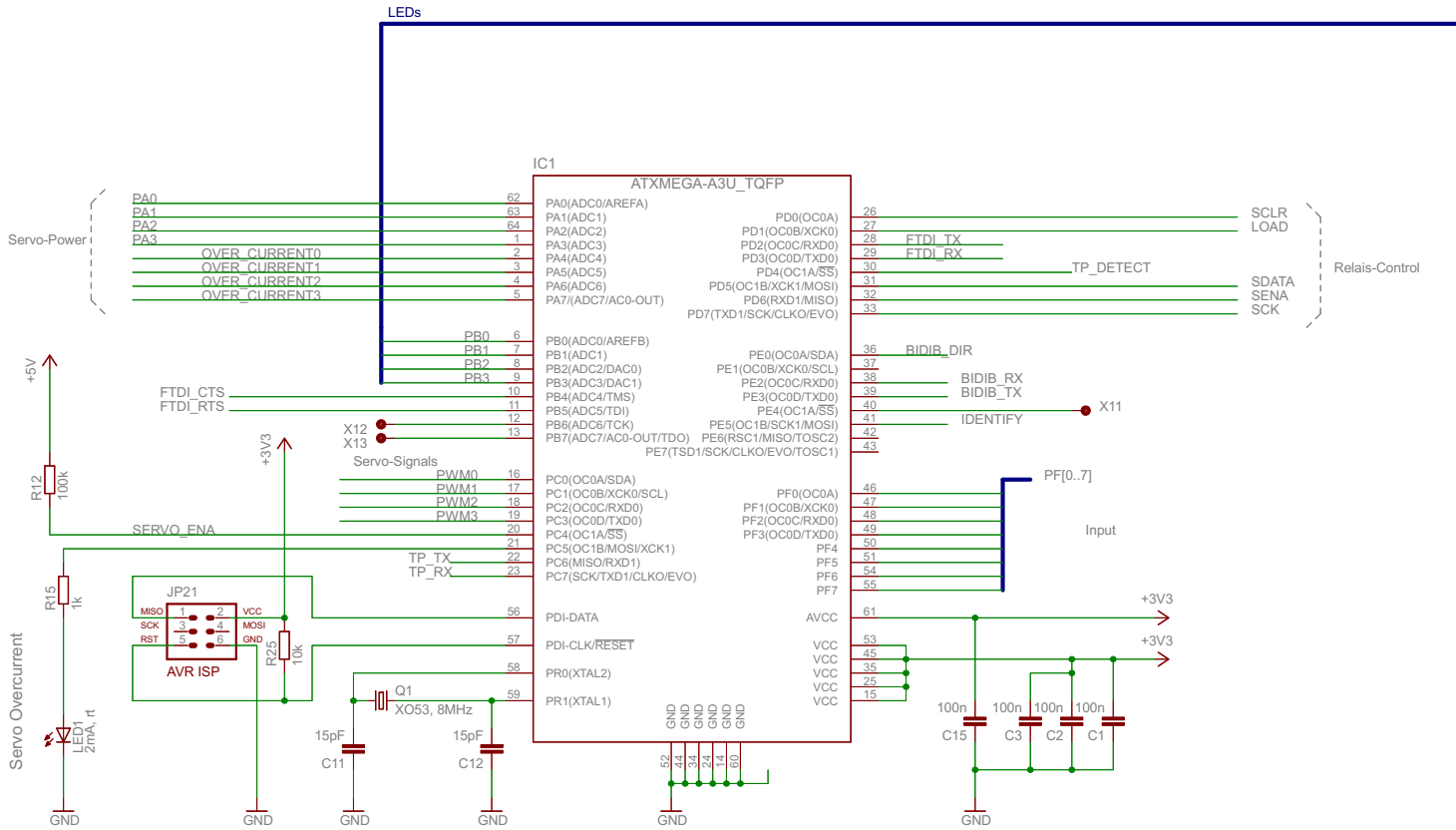

Control-LED

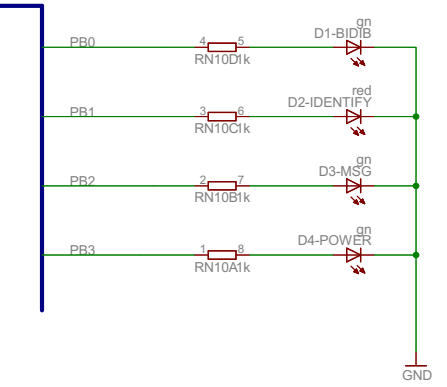

Identify

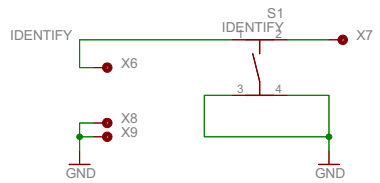

USB / Debug

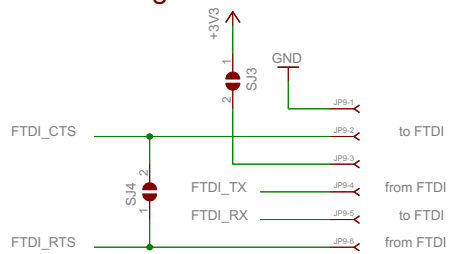

Entwicklung: Wolfgang Kufer www.opendcc.de Christoph Schörner www.fichtelbahn.de	Project: ST4 BiDiB, 4 Servos + Frogpolarity	ST4_V1.1 23.03.2016 09:43:31 Sheet: 5/5

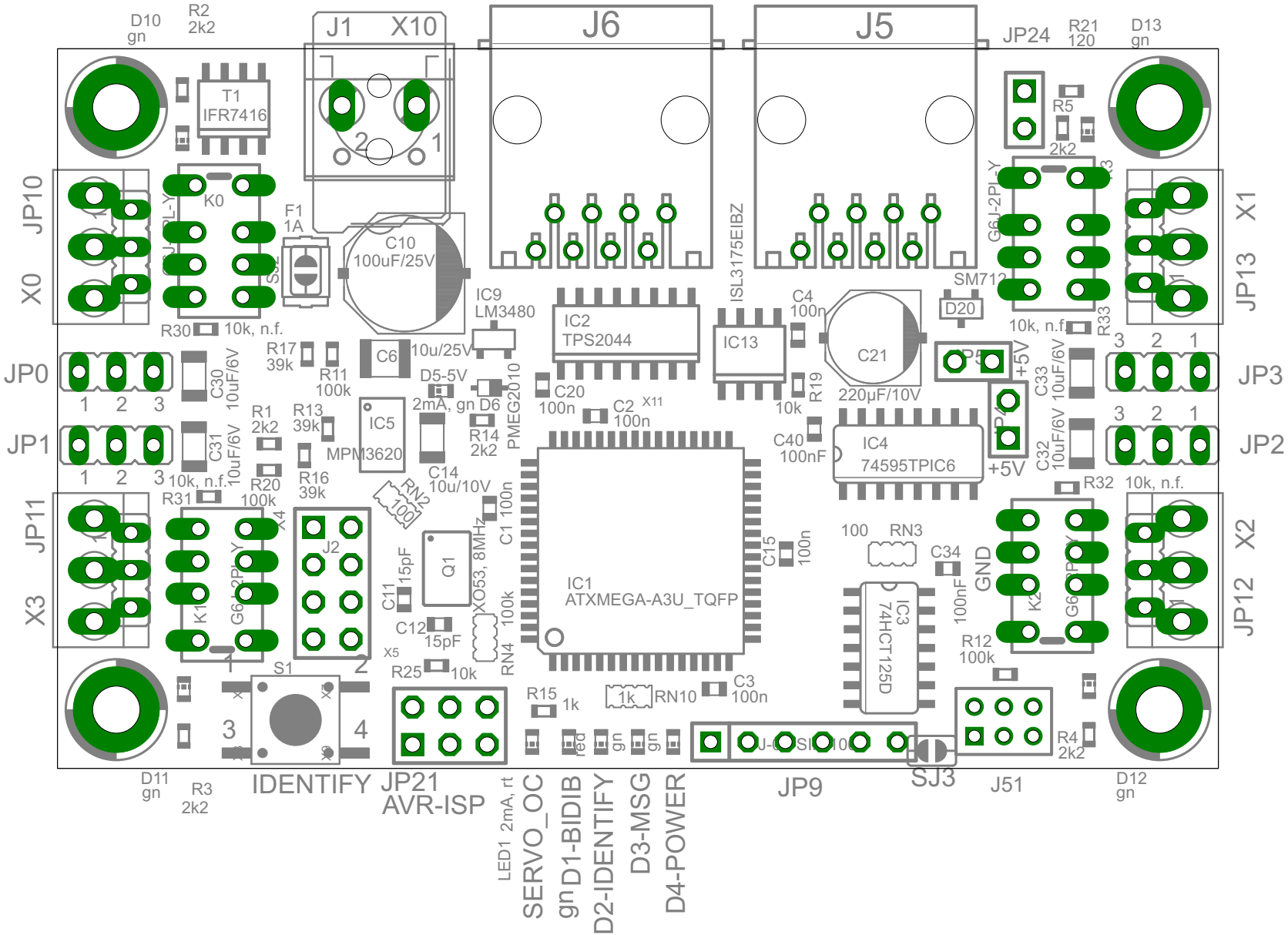
D10
gn
R2
2k2
J1
X10
J6
J5
JP24
R21
120
D13
gn
T1
IFR7416
R5
2k2
JP10
X0
K0
F1
1A
C10
100uF/25V
ISL3175EIBZ
G6J-2PL-Y
X1
JP13
IC9
LM3480
IC2
TPS2044
IC13
C4
100n
SM712
D20
R30
10k, n.f.
R33
10k, n.f.
R17
39k
C6
10u/25V
R11
100k
D5-5V
2mA, gn D6
PMEG2010
C20
100n
C2
100n
X11
C21
220µF/10V
+5V
C33
10uF/6V
JP0
C30
10uF/6V
JP3
JP1
C31
10uF/6V
R1
2k2
R13
39k
IC5
MPM3620
R14
2k2
R19
10k
C40
100nF
IC4
74595TPIC6
+5V
C32
10uF/6V
JP2
10k, n.f.
R31
R20
100k
R16
39k
C14
10u/10V
RN2
100
C1 100n
R32
10k, n.f.
JP11
X3
X4
K1
G6J-2PL-Y
J2
Q1
XO53, 8MHz
C11
15pF
C12
15pF
X5
RN4
100k
IC1
ATXMEGA-A3U_TQFP
C15
100n
100
RN3
C34
100nF
GND
IC3
74HCT125D
R12
100k
JP12
X2
K2
G6J-2PL-Y
S1
R25
10k
R15
1k
1k
RN10
C3
100n
R4
2k2
D11
gn
R3
2k2
IDENTIFY
JP21
AVR-ISP
LED1 2mA, rt
SERVO_OC
gn
D1-BIDIB
D2-IDENTIFY
D3-MSG
D4-POWER
JP9
SJ3
J51
D12
gn